15DMOW4_S 1.5 series

15W - Single Output - Wide Input - Isolated & Regulated
1" x 1" DC-DC Converter

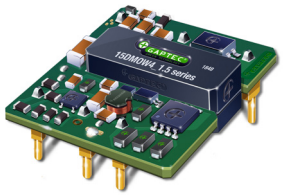

DC-DC Converter 15 Watt

- **Wide 4:1 input voltage range**
- **High efficiency up to 88%**
- **Short circuit protection (SCP)**
- **Isolation voltage: 1.5kVDC**
- **Over-current, over-voltage protection**
- **Under-voltage lockout**
- **RoHS compliant**
- **Operating temperature range: -40°C to +85°C**
- **Fixed switching frequency**
- **Remote on/off logic**
- **International standard pin-out**
- **Monotonic startup into normal and pre-bias loads**
- **Adjustable output voltage range**
- **Meets IEC60950-1**

The 15DMOW4_S1.5 series are isolated 15W DC/DC converters with 4:1 input voltage. They feature efficiency up to 88%, 1500VDC isolation, operating temperature of -40°C to +85°C, input under-voltage protection, output over-voltage, output over-current, output short circuit protection and meets IEC60950-1.

They are widely applied in distributed power architectures, wireless networks, access and optical network equipment, enterprise networks, latest generation IC's (DSP, FPGA, ASIC) and microprocessor powered applications.

Common specifications

Short circuit protection:	Hiccup, continuous, self-recovery
Cooling:	Free air convection
Operation temperature range:	-40°C~+85°C
Storage temperature range:	-40°C~+125°C
Storage humidity range:	90% MAX
Thermal stability time:	30mins
FIT:	167 10^9/hours
Vibration:	IEC60068-2-6: 10~500Hz sweep, 0.75mm excursion, 10g acceleration, 10minutes in each 3 perpendicular directions
Shock:	IEC 60068-2-27:200g acceleration, duration 3 ms,6 drops in each 3 perpendicular directions
Safety:	Compliant to IEC60950-1, UL60950-1,EN60950-1 and GB4943
Switching frequency:	300KHz MIN, 3.3V: 350KHz MAX, 12V: 500KHz MAX
Transportation:	ETS300019-1-2
MTBF (Telcordia SR332, 40°C):	6,000,000 hours
Weight:	9g

Protection specifications

Item	Test condition	Min	Typ	Max	Units
Input under voltage lockout	Io=0 to Io(max) full temp. range • Turn-on • Turn-off • Hysteresis	 16 15 0.5	 17 16 1	 18 17 1.5	 VDC VDC VDC
Over current protection	Hiccup mode, automatic recovery		yes		A
Over voltage protection	Clamp voltage mode • 3.3V • 12V	 3.79 13.44		 5 18	 VDC VDC
Over temperature protection	Automatic recovery See OTP section		125		°C
Over Temperature Protection Hysteresis			10		°C

Example:
15DMOW4_2415S1.5
15 = 15Watt; D = DIP; M = Miniature; O = Open frame; W4 = wide input (4:1); 18-36Vin; 15Vout; S = single output; 1.5 = 1500VDC

Output specifications

Item	Test condition	Min	Typ	Max	Units
Voltage set point 25°C, Io=Io (max)	• 3.3V • 12V	3.25 11.82	3.3 12	3.35 12.18	V V
Voltage regulation	Vin= Vin (min) to Vin(max)		0.05	0.2	%Vo
Load regulation	Io=0 to Io (max) • 3.3V • 12V		 0.1 0.05	 0.3 0.2	 %Vo %Vo
DC Current-Limit Inception	3V	110		180	%Io
Current Limit	12V	1.43		2.34	A
Voltage precision (full temperature range)	Vin=Vin (min) to Vin(max), Io=0 to Io(max)			3.0	%Vo
Voltage adjustment range	Rated power Io=0 to Io (max) • 3.3V • 12V	 3.3 -10	 ±0.008	 3.63 10	 V %Vo
Temperature drift	Full temp. range		±0.008	±0.02	%/°C
Dynamic response recovery time	25%-50%-25%,50%-75%-50% Io(nom)		100	200	µS
Dynamic response overshoot	di/dt=0.1A/µS, 10µF Tantalum capacitor, 1µF ceramic capacitor • 3.3V • 12V		 3	 8 3	 %Vo %Vo
Ripple and noise*	P-P • 3.3V • 12V RMS • 3.3V • 12V		 40 50 10 15	 80 100 20 50	 mV mVp-p mV mVRMS
Turn-on delay time	Time from instant at which Vin=Vin (Turn-on) until Vo=10% of Vo (nom) • 3.3V • 12V		 10	10 25	ms ms
Turn-on rise time	Time for Vo to rise from 10% of Vo (nom) to 90% of Vo (nom) • 3.3V • 12V		 30	10 50	ms ms
Turn-on transient: output voltage overshoot	Vin=Vin(min) to Vin (max), Io=0 to Io (max), full temp. range • 3.3V • 12V			5 3	%Vo %Vo

* Measured with 10uF Tantalum capacitor and 1uF ceramic capacitor across output.

GAPTEC-Electronic GmbH & Co. KG
sales@gaptec-electronic.com – www.gaptec-electronic.com

15DMOW4_S1.5 series

15W - Single Output - Wide Input - Isolated & Regulated
1" x 1" DC-DC Converter

Input specifications

Item	Test condition	Min	Typ	Max	Units
Operating input voltage	Io=0 to Io(max)	18	48	75	VDC
Max. input current	100% load Vin= Vin (min) to Vin (max) • 3.3V • 12V			 1.3 1.1	 A A
Input current	no load, full input • 3.3V • 12V		 30 15	 60 50	 mA mA
Stand-by input current	REM disabled		3	6	mA
Reflected ripple current	peak-to-peak, 5Hz to 20 MHz,12µH source inductance		8	30	mA
Inrush transient	Vin=Vin (min) to Vin (max), Io=0 to Io (max) • 3.3V • 12V			 0.1 0.01	 A^2S A^2S
Starting voltage*	• 24VDC input • 48VDC input			9 18	VDC VDC
Input voltage ripple rejection	120Hz		60		dB
Input fuse				3	A

* Nominal input voltage & constant resistance load

Isolation specifications

Item	Test condition	Min	Typ	Max	Units
Isolation voltage*	Input/output			1500	VDC
Isolation resistance	Test at 500VDC	10			MΩ
Isolation capacitance**			1000		pF

* Test duration 1 minute, leak current lower than 10mA, no arcing or breakdown
** The isolation resistance of input to output is more than 10MΩ

Remote control specifications

Item	Test condition	Min	Typ	Max	Units
Logic low voltage		-0.7		0.8	VDC
Logic high voltage		2		18	VDC

* Converter guaranteed logic high when REM pin is left open

Product Selection Guide

Part Number	Input Voltage [VDC] Nominal	Range	Max	Output Voltage [VDC]	Output Current [mA] Full load	Efficiency [%, Typ.]	Capacitive load [µF, Max.]
15DMOW4_4803S1.5	48	18-75	80	3.3	5000	88	1000
15DMOW4_4812S1.5	48	18-75	80	12	1300	88.5	470

Typical characteristics

Converter Efficiency Vs. Output Current

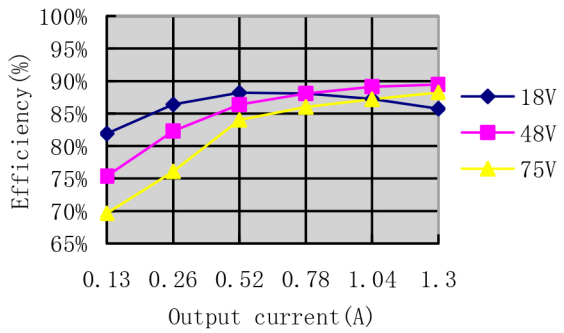

Available load current vs. ambient temperature and airflow for the module mounted horizontally

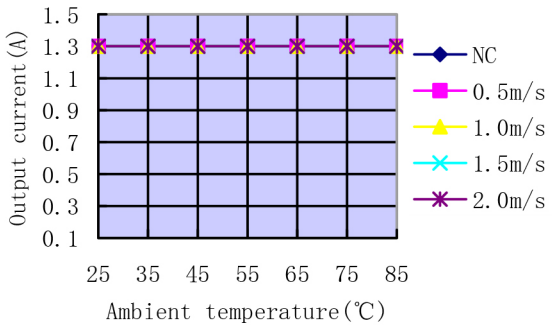

Input Reflected Ripple Current Test Setup

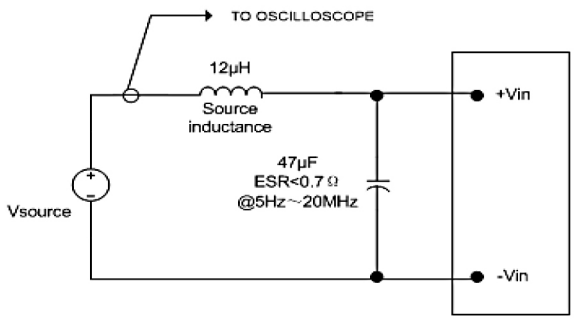

Measure input reflected ripple current with a simulated source inductance of 12µH. The measurement points for input reflected ripple current is showed above.

Output Ripple and Noise Test Setup

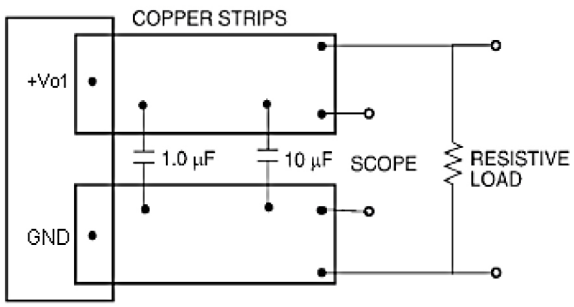

Scope measurements should be made using a BNC socket, with a 1µF ceramic capacitor and a 10 µF tantalum capacitor. Position the oscilloscope probe between 51mm and 76mm (2 inch and 3 inch) from the module.

Remote on/off

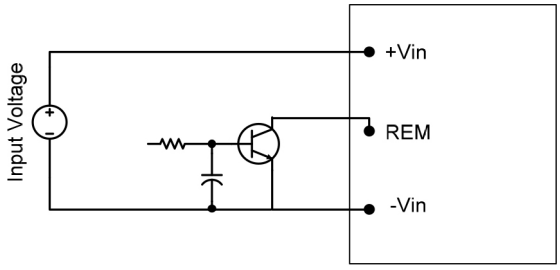

The REM pin is used to turn the power converter remote on or off via a system signal. This power module is negative logic version. When the REM pin is at logic high the power turns off and turns on at logic low.

To turn the power module on and off, the user must supply a switch to control the voltage between the REM pin and -Vin terminal (see Figure 3). A logic low is VREM = -0.7V to 0.8V. The maximum IREM during logic low is 1mA. The switch should maintain a logic low voltage while sinking 1mA. During logic high, the typical maximum VREM voltage is18V.

If not using the remote on/off feature, short REM pin to -Vin.

Tref measurement location

3.3V

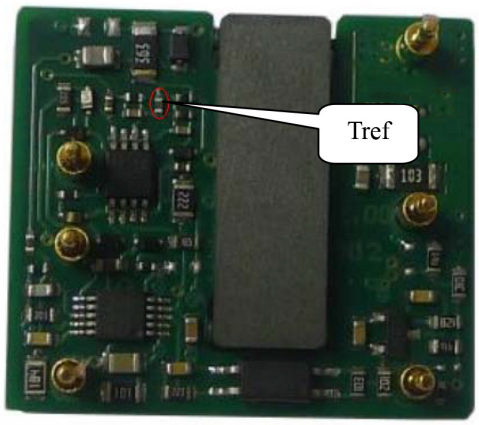

12V

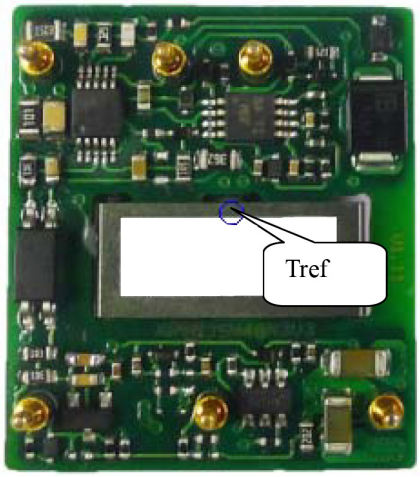

Application of trim and calculation of trim resistance

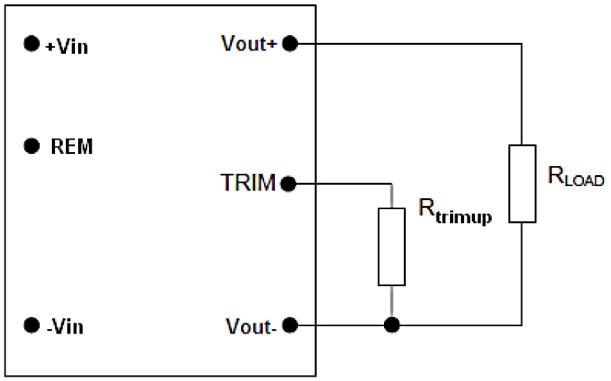

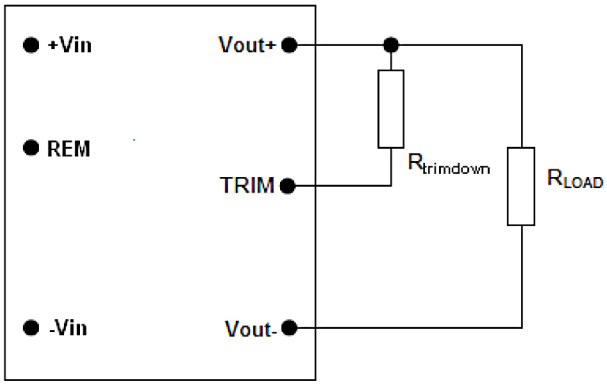

3.3V

$$Rtrim\_up = \frac{2.5 \cdot 5110}{Vo\_adj - 3.3} - 2050$$

12V

$$Rtrimup = \frac{2.5 \cdot 10000}{Vo\_adj - 12} - 5110$$

$$Rtrimdown = \frac{(Vo\_adj - 2.5) \cdot 10000}{12 - Vo\_adj} - 5110$$

Output voltage trim allows the user to increase or decrease the output voltage set point of a module. This is accomplished by connecting an external resistor between the TRIM pin and either the Vout+ or Vout- pins. If not using the trim feature, leave the TRIM pin open.

Recommended reflow profile

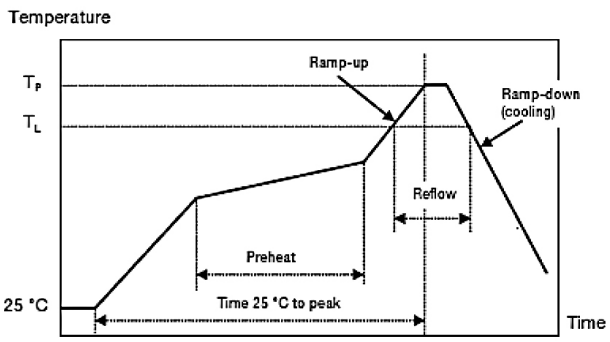

Reflow process specifications		Pb-free
Average ramp-up rate		3°C/s max
Solder melting temperature (lim)	T_L	+217°C
Time above T_L		30 s~90s
Minimum pin temperature	T_{pin}	+235°C
Peak product temperature	T_p	+245°C
Average ramp-down rate		6°C/s max
Time 25°C to peak		6 minutes max

Peak product temperature 12V: +260°C

Recommended EMC application

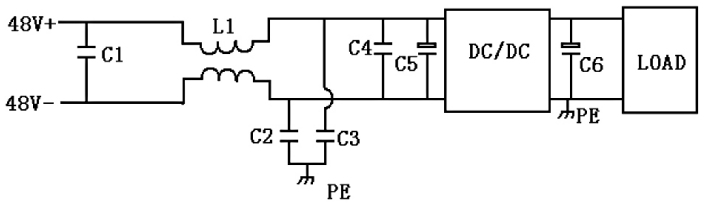

Suggested configuration to meet the conducted emission limits of EN55022 Class A.

Component	Specifications
C1	SMD ceramic capacitor-1uF
C4	SMD ceramic capacitor-0.1uF
L1	Magnetic material-1320uH-+-25%
C2 C3	Film through-hole mounted safety capacitor-0.1uF
C5	Electrolytic capacitor-100uF
C6	Electrolytic capacitor-470uF

Mechanical dimensions

3.3V

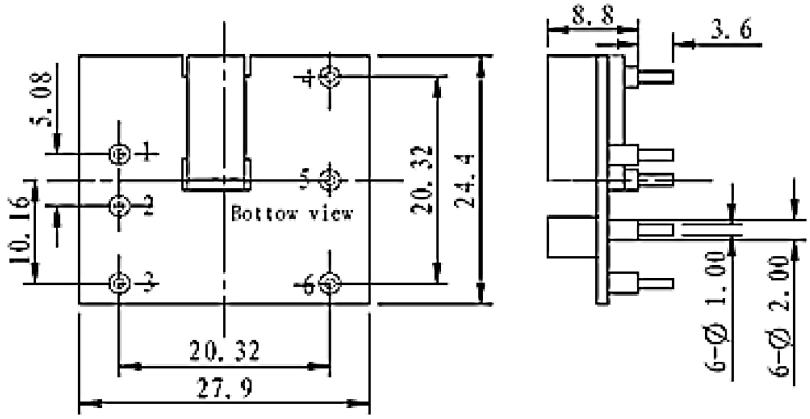

Pin No.	Symbol	Function
1	+Vin	Positive input voltage
2	-Vin	Negative input voltage
3	REM	Remote control
4	Vout+	Positive output voltage
5	TRIM	Output voltage trim
6	Vout-	Negative output voltage

12V

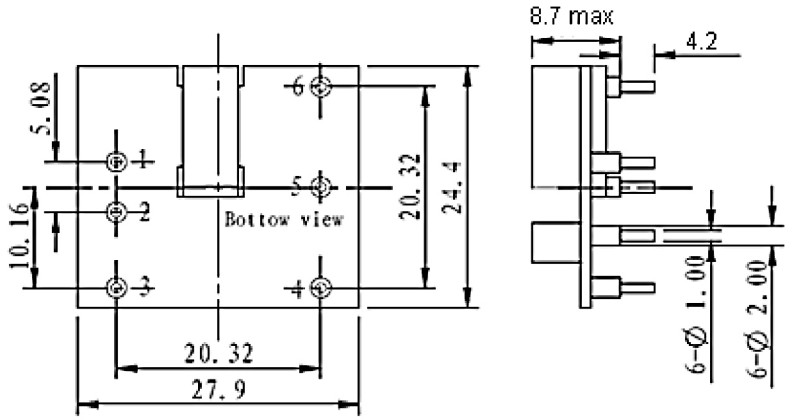

Pin No.	Symbol	Function
1	+Vin	Positive input voltage
2	-Vin	Negative input voltage
3	REM	Remote control
4	Vout-	Negative output voltage
5	TRIM	Output voltage trim
6	Vout+	Positive output voltage

Recommended pad layout

3.3V

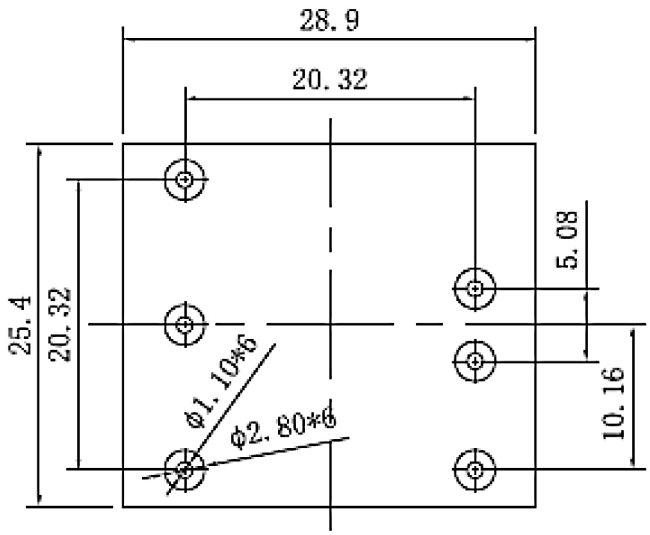

12V

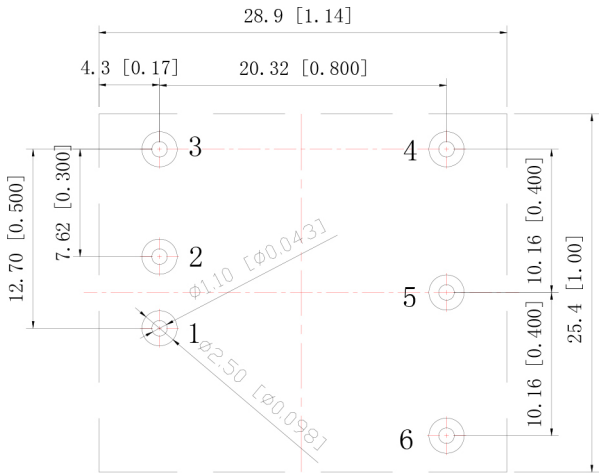

Note:

1. The maximum capacitive loads offered were tested at input voltage range and full load.
2. Only typical model listed. Non-standard models will be different from the above, please contact us for more details.
3. All specifications are measured at TA = 25°C, humidity <75%, nominal input voltage and rated output load unless otherwise specified.
4. In this datasheet, all the test methods of indications are based on corporate standards.
5. We can provide product customization service, please contact our technicians directly for specific information.
6. Our products shall be classified according to ISO14001 and related environmental laws and regulations, and shall be handled by qualified units.